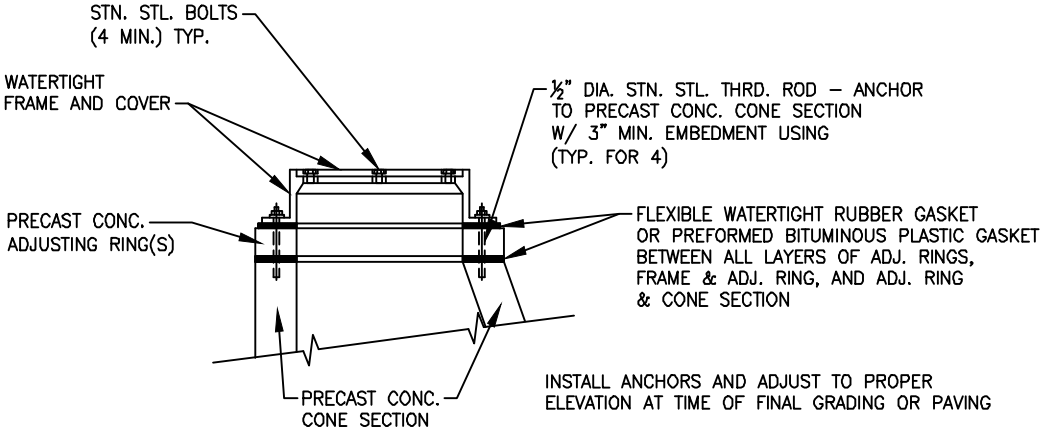

WATERTIGHT FRAME & COVER DETAIL

NO SCALE

Downers Grove Sanitary District

REV. 2–1–15